Mount 10 Micron GM4000 QSI – customer opinion

After more than 20 years of occasional field astronomy, I took the decision in 2007 to go in the upper gear and to construct my observatory in my garden with a fix assembly. The site is certainly not ideal, but what a pleasure to be ready in 3 minutes for an observation or photo session. A fix installation has the enormous advantage to keep all the successive optimizations and fine tunings.

Left: frame and column with 1 m3 concret in the ground. Right: finished observatory with sliding roof.

I opt first for the famous Paramount ME mount on which I installed my C14 in parallel of my refractor AP155. The setup worked perfectly many years at my entire satisfaction.

Paramount ME mount, refractor AP 155 in parallel with a C14.

I always dreamed of a nice astrograph, and decided in 2010, after numerous studies and comparisons, to buy a Planewave CDK 17" f/6.8. The problem was, on one side, the volume at disposal in my observatory, and on the other side, the 68 kg maximum capacity of the Paramount ME.

I confirmed that the volume at disposal in my observatory was sufficient, this after having created a 3D model of the assembly, taking in account the various gravity centers; I introduced also some error margins. In order to center perfectly all the rotation axis in the 2.80 m x 2.80 m square available in my observatory, I had to move 20 cm south the base of the mount column.

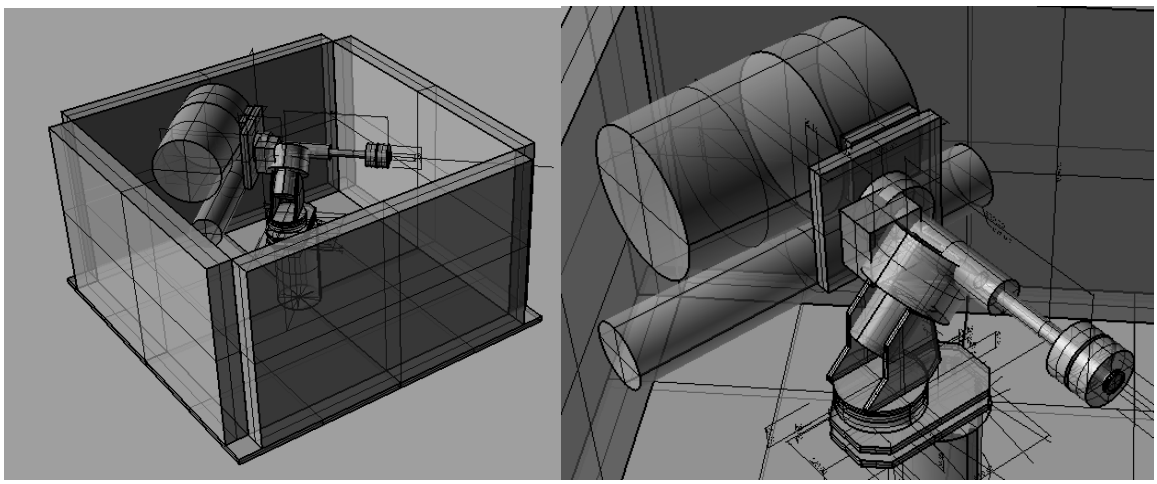

3D model of the assembly and the 4 walls.

The CDK 17" weight is 43kg, the AP155 13kg, and all the base plate, accessories and auxiliary instruments about 30kg, the total is more than 85kg which I judged to be too much for a reasonable use of my dear Paramount ME. I had then the choice in abandoning my AP155, what would have been a drama, or change the mount.

I finally decided to change the mount. The alternatives on the market for standard high load models and affordable prices are quiet limited. After studies, many readings and advices, I decided to buy a GM4000 QSI from 10 Micron (max load 150 kg) made in Italy and distributed by Baader Planetarium.

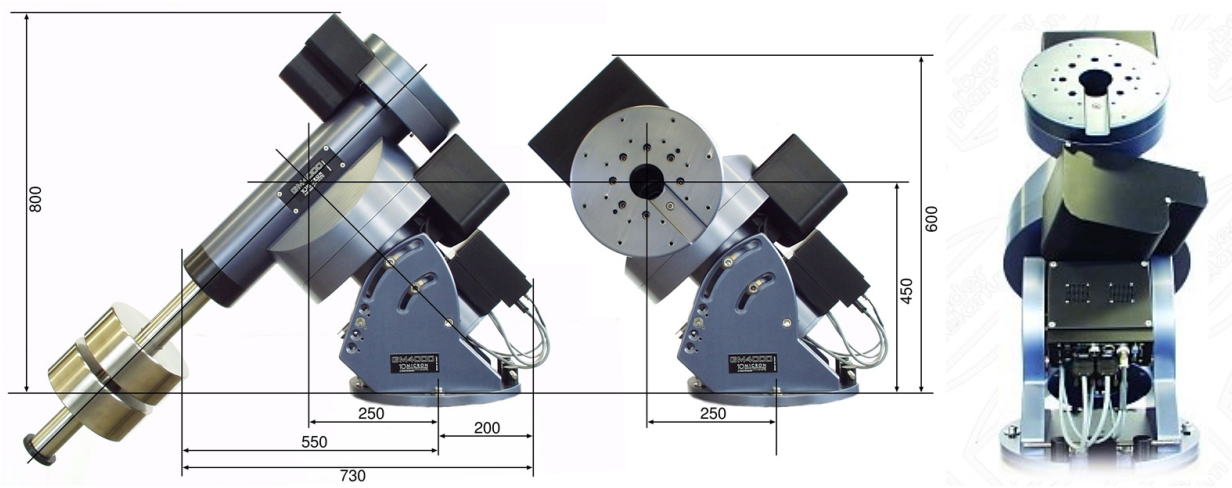

10 Micron GM4000 mount (max load 150 kg)

The reasons of my choice were:
- The excellent characteristics, the quality of the elements, the technical choices, the good finishing and stability (servomotors, belt transmissions, very large RA worm gear, system of pre-tensioning of the worm gear, cable passages in the mount, and so one).
- Microprocessor under Linux, wide connectivity possibilities (RS232, Ethernet), the mount works without be connected to a computer.
- Metrical dimensions, in particularly the screws and threads.
- Good support (Baader Planetarium) and very detailed operating manual (paper and PDF)
- Mount in stock and therefore available in a few days.

Once the "monster" of 125 kg was in my garage, I was of course very impressed by the gigantic and very esthetical aspect of this mechanical piece. It is at that moment that you ask yourself if your

hobby does not take too many space in your familial circle… but I can reassure you, this anxiety disappear quiet quickly!

I then designed the pieces necessary for the complete installation, mainly:
- Plates under the mount to translate the base 20 cm south, including a fine thread level adjustment system.
- Base plate for mounting the instruments including a dovetail with auxiliary fine adjustment to facilitate the balancing.
All the parts were in aluminum on which I made a black surface treatment.

The installation of the mount didn't generate particular problems; the most difficult was the transport of the 125 kg mount through the garden and the lifting on the column. The assembling of the CDK17" Planewave was easy but needed imperatively 2 more persons for a few minutes; the other instruments where very easy to install except two holes which were not drilled at the right place… What a pleasure to look at this magnificent assembly, very impressive! The motivation to get all that work properly is now at the top.

GM4000 mount with Planewave 17" and reftactor Astro Physics 155. Each counter weight is 20 kg!

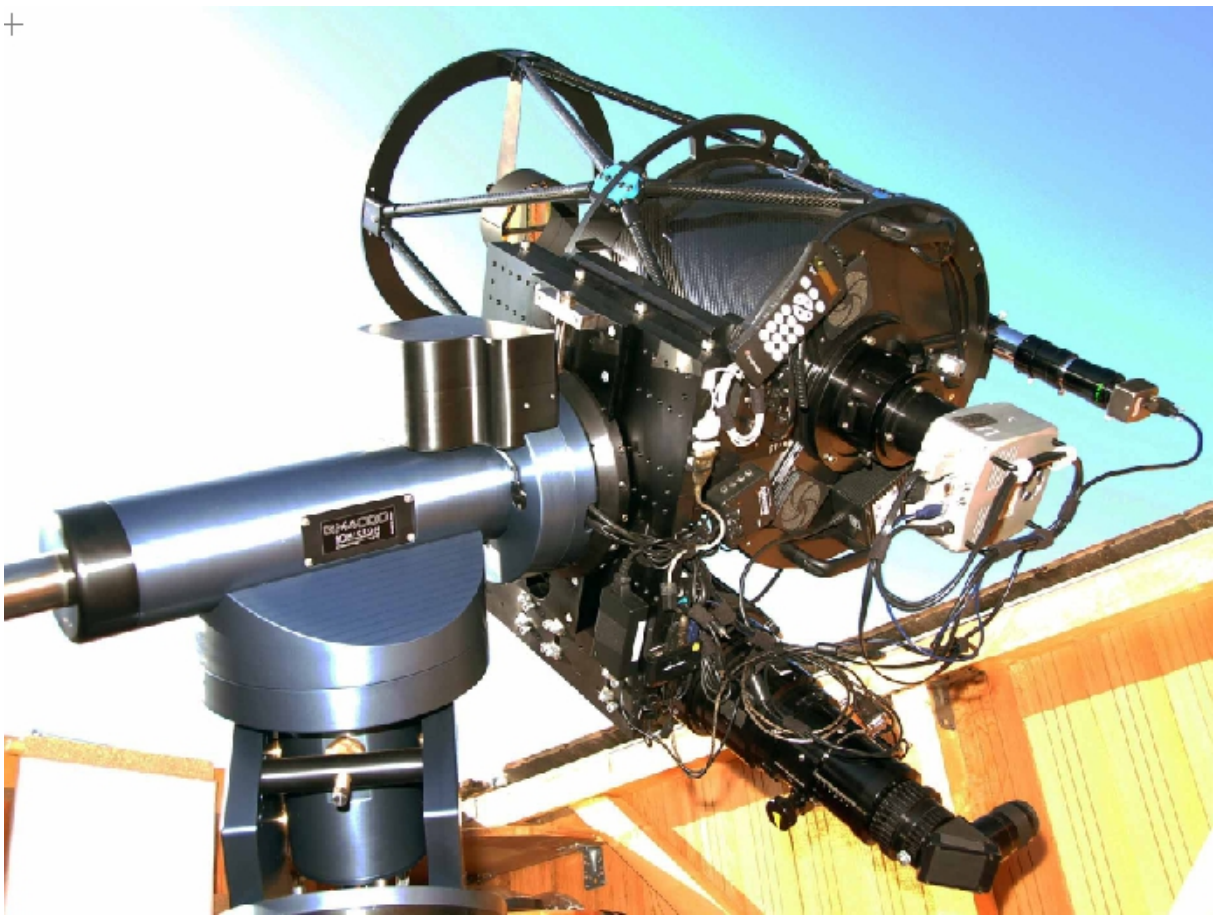

The space to pass the cables through the mount is very generous. Even after all was installed, I was able to pass supplement cables: a steel wire with a hook, a flashlight and a bit dexterity…

View of the complete assembly with the roof open, the vegetation grows very fast!

The balancing is of course a fundamental operation and, looking at the weights of the elements, I asked the help of a person during the phases of disengagement of the worm gears. Even having done the calculations of the counterweights, I took not the risk to have the assembly rotating suddenly in the wrong direction. The balancing of the assembly has been greatly facilitated by the mechanical

adjustment items I designed. The sliding of these large weights in the dovetails, for instance, is close to be impossible without auxiliary systems. I finally leveled the mount using a digital level.

Left: dovetail lateral displacement system. Right: level adjustment system through 3 fine threads.

The first switch on is one of these symbolic milestone, which marks the beginning of the various alignments, under other the polar alignment. It is here that I particularly appreciated the intuitive and some of intelligent aspect of the 10 Micron mount and it's QSI control system (precision of the mechanics, hand pad, various functionalities, and son one). I have to repeat here that my previous mount was the excellent Paramount ME, this means that my references were in correspondence. I have the pleasure to say here that I was very positively surprised by the very easy and quick first handling of the mount, also supported by a very complete operator manual; you feel the practical experience of the designers. The polar alignment needs only 2-3 iterations following the information on the pad (number of rotations of the various RA and DEC adjustment screws). The pointing model is already very accurate after 3 starts, is fine tuned easily and efficiently thanks to an internal star proposition generation; it is not necessary to create an external pointing model, in particularly thanks to automatic refraction corrections calculated by the system. I also installed permanently a GPS (sold separately) mainly to have an absolute time reference, and therefore pointing precision.

I then connected the mount on my computer (Windows XP Pro). I chose the RS232 connection (Ethernet possible also). I installed all the drivers and connected without problem the mount on my planetarium, I have Sky 6; of course after groped a bit for the COM port… it is also possible to visualize the hand pad on the computer, what is helpful in some situations. As all other the programs were installed already (CCDSoft, FocusMax, and so one), I had just to adapt a few parameters and install a cable between the CCD relays (SBIG STL11000) and the guiding port of the mount; this operation didn't generate any problem.

I was then ready for my fists photo session. After having equilibrated the temperatures, I did a few "V" curves with FocusMax, calibrated the guiding, and took my first 10 min. picture using the a separate guiding scope. One of the challenge was to find the right guiding solution for a long focal instrument (the CDK 17" has 2932 mm focal length). I realized that parallel guiding system can hardly be used, even if the rigidity of the assembly is very high. Flexures, even if intuitively you think they are very small (my base plate is 30 mm thick!) will have as consequence none round stars. After several trials, it got evident that the off –axis guiding is the only solution.

I rapidly upgraded the software of my mount to the new V2.7.1 which introduces numerous ameliorations and new functionalities, as for instance the balancing measuring the motor torques, satellite or asteroid tracking possibilities, saving of several pointing models depending the

instruments configurations, compensation of the refraction to avoid guiding re-calibration, and many more.

I am now ready for my observation or photos sessions, and look forward to spend my nights in company of this dream material, I am conscious that I am very lucky. The marriage 10 Micron and Planewave makes sense and I can, without restriction, recommend this material to the amateurs who plan to acquire high end material, you would not regret it.